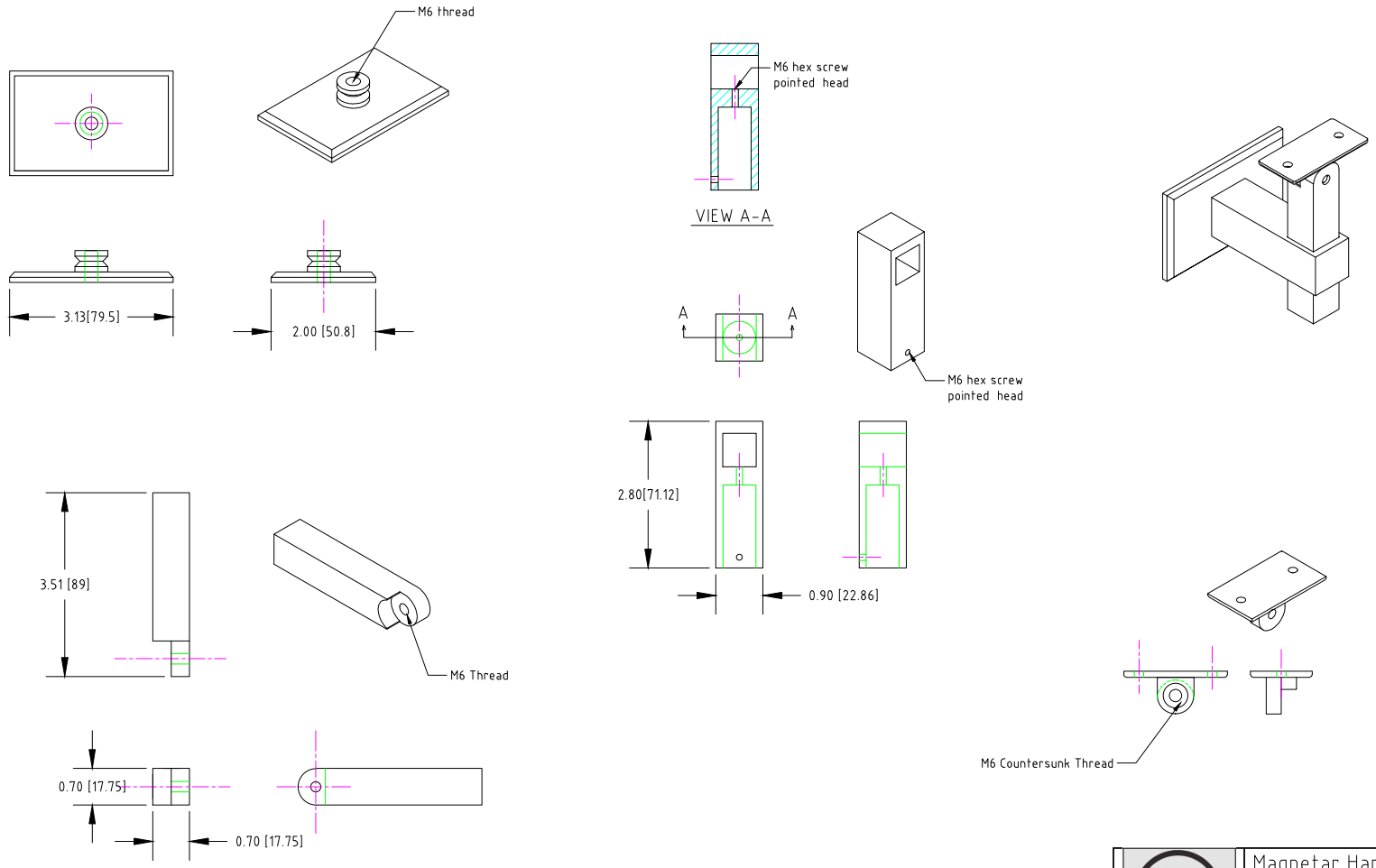

ZONE	REV	DESCRIPTION	DATE	APPROVED

REVISIONS

Magnetar Handrail Bracket

INLINE DESIGN

Date: 05/29/2015

SIZE	FSCM NO.	DWG NO.	REV
A		HBWA.014	3

SCALE 1:1 SHEET 1

HBWA.014 Magnetar Handrail Wall Bracket

05/29/2015

JD